Journal Homepage: -www.journalijar.com

INTERNATIONAL JOURNAL OF ADVANCED RESEARCH (IJAR)

Article DOI: 10.21474/IJAR01/20736
DOI URL: http://dx.doi.org/10.21474/IJAR01/20736

RESEARCH ARTICLE

SMART SOLAR-POWERED WATER PUMPING SYSTEM WITH ENERGY STORAGE AND BIDIRECTIONAL POWER FLOW MECHANISM

Md. Fazle Rabbi Sweet[1], Mst. Ayesha Siddika[2],Fatema Haque Jui[3], Md. Tareq Hasan[2], Md. Abdur Rahim[2], Md. Sadi Rifat[2], Nasrin Akter[4] And Prodip Krishna Sadhukhan[5]

1. Department of Electrical and Electronics Engineering, Daffodil International University.
2. Department of Computer Science and Engineering,Prime University.
3. IT & Admin Assistant Manager (Sytem Admin), Department of HRIS, Fakir Fashion LTD.
4. Department of Computer Science and Engineering,Bangladesh University of Business and Technology (BUBT).
5. Department of Pharmacy,University of Development Alternative.

Manuscript Info

Manuscript History
Received: 15 Febuary 2025
Final Accepted: 18 March 2025
Published:April 2025

Abstract

Due to improvements in semiconductor fabrication techniques and increased efficiency, solar photovoltaic (PV) technology is gaining popularity. The efficiency of an SPV cell has risen to 22.3%. Because of the cells' enhanced efficiency, less room is needed overall. In the modern era, solar photovoltaic (PV) based renewable energy generation is heavily integrated into the grid. Agriculture and the majority of enterprises are dependent on water pumping. Large discharge rate pumps are needed in industries for extended periods of time. In the Bangladesh context, farmers must be able to pump water. When it doesn't rain, lakes, reservoirs, and municipal supplies provide the water needed for agriculture. Pumps are needed to move the water from these sources. Furthermore, an essential amenity that cannot be overlooked in isolated places is a water source for cattle. At first, gasoline or diesel-powered centrifugal pumps were used to move the water. But these produce far too much noise and pollution. Diesel pumps are beginning to give way to electricity pumps as environmental consciousness grows. However, agricultural lands may not always have access to an electrical power source. Furthermore, the atmosphere is contaminated by thermally based electrical power generation. Owing to these limitations, unconventional energy sources are investigated to meet the pumping needs. Water pump demand is well-suited to solar PV-based generation. An economic analysis has been made to emphasize the benefits of the solar PV based water pumping systems in Bangladesh .Efforts have been made in the literature to utilize the solar power by directly connecting the PV panels to the DC motor driven pumps [3]. However, these systems suffer from inefficiency as they are not designed to operate on the maximum power point (MPP). A step up converter is used to match the equivalent impedance of motor-pump assembly with that of PV panel. Therefore, proposed configuration is able to track the MPP easily. However, the DC motors by construction are not suitable from pumping applications.

"© 2025 by the Author(s). Published by IJAR under CC BY 4.0. Unrestricted use allowed with credit to the author."

Corresponding Author:- Md. Fazle Rabbi Sweet
Address:- Department of Electrical and Electronics Engineering, Daffodil International University.

…….....

Introduction:-

Due to improvements in semiconductor fabrication techniques and increased efficiency, solar photovoltaic (PV) technology is gaining popularity. The efficiency of an SPV cell has risen to 22.3%. Because of the cells' enhanced efficiency, less room is needed overall. In the modern era, solar photovoltaic (PV) based renewable energy generation is heavily integrated into the grid. Agriculture and the majority of enterprises are dependent on water pumping. Large discharge rate pumps are needed in industries for extended periods of time. In the Bangladesh context, farmers must be able to pump water. When it doesn't rain, lakes, reservoirs, and municipal supplies provide the water needed for agriculture. Pumps are needed to move the water from these sources. Furthermore, an essential amenity that cannot be overlooked in isolated places is a water source for cattle. At first, gasoline or diesel-powered centrifugal pumps were used to move the water. But these produce far too much noise and pollution. Diesel pumps are beginning to give way to electricity pumps as environmental consciousness grows. However, agricultural lands may not always have access to an electrical power source. Furthermore, the atmosphere is contaminated by thermally based electrical power generation. Owing to these limitations, unconventional energy sources are investigated to meet the pumping needs. Water pump demand is well-suited to solar PV-based generation. An economic analysis has been made to emphasize the benefits of the solar PV based water pumping systems in Bangladesh .Efforts have been made in the literature to utilize the solar power by directly connecting the PV panels to the DC motor driven pumps [3]. However, these systems suffer from inefficiency as they are not designed to operate on the maximum power point (MPP). A step up converter is used to match the equivalent impedance of motor-pump assembly with that of PV panel. Therefore, proposed configuration is able to track the MPP easily. However, the DC motors by construction are not suitable from pumping applications.

They are unsuitable for use with submersible pumps and have commentator and brushes that require frequent maintenance. Because of their maintenance-free operation, toughness, and brushless design, AC motors are chosen over DC ones. The literature has proposed two distinct designs for AC motor-based MPPT: single-stage and two-stage. In a single stage, the AC motor pump is driven by a voltage source inverter (VSI) that is connected to the SPV array. Less power is needed for semiconductor switches and other components in single stage topologies. They do, however, have a lower DC link voltage and less radiation. Since the DC link in two-stage systems is regulated, the modulation index is kept constant. There have been reports of solar water pumping devices in the literature that use various engines. A bidirectional rectifier and transformer have been presented as part of an idea for a grid-connected solar PV water pumping system. However, the presence of hefty magnetic components make the system noisy and enormous in size. In contrast to the method previously discussed, a smart solar water pumping system is proposed in this work that uses power electronic components to control the flow of power. The structure of this document is as follows. The necessity of solar water pumping is discussed in the first part. The suggested system's design and configuration are provided in the second and third parts, respectively. An overview of the suggested system's control strategy is provided in the fourth section. The fifth portion presents the outcomes of simulations, while the sixth section wraps up the work.

I. CONFIGURING THE SYSTEM

The system configuration of the suggested smart solar water pumping system is displayed in Fig. 1. It is made up of a three-phase induction motor drive (IMD) connected to a centrifugal pump, a boost converter, a voltage source inverter (VSI), a voltage source converter (VSC), and a solar PV array with a rated or greater capacity. Peak power from the PV array is transferred to the IMD more easily thanks to the boost converter. On the other hand, the VSI is the essential part that powers the IMD. Power is transferred between the grid and the DC link by a grid-connected VSC. Additionally, the VSC raises the DC link voltage and enhances the AC mains' power quality. The boost converter is essential to obtaining the most power output from the SPV.

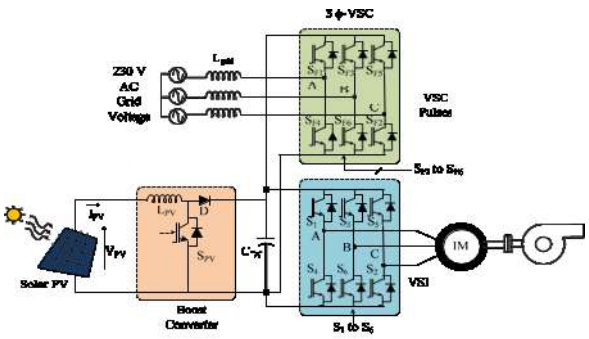

Figure 1. Configuring a bidirectional power flow capable smart solar water pumping system

A. The Proposed System's Design

The suggested smart solar water pumping system is made to work with an induction motor drive with a power rating of 2.3 kW/3 HP. Solar PV modules are linked in accordance with the system's necessary voltage, current, and power rating. Table I

displays the designed parameters. Since installing a greater capacity PV system is an option for Modes I, II, and III, their PV configurations differ from Mode IV's.

II. PROPOSED SYSTEM CONTROL

The utility grid supply and the SPV array are the two power sources that supply the system. Nonetheless, the control is made to intelligently divide the available power from both sources. Additionally, the system is built resilient to variations in radiation and surrounding circumstances. The suggested system can be managed in four distinct modes based on the power sources availability.

Mode I: This mode operates only when the solar PV array's power is available. If the available power is less than or equal to the water pumping system's rated power, the IMD operates using MPPT. Nonetheless, the system operates at rated speed without MPPT if the insolation is such that the maximum power available exceeds the IMD's rated capacity. This is because the system is unable to absorb the power at MPP.

Mode II: When the SPV array is malfunctioning or there is no electricity from the sun, this mode activates. The pump can be powered by the utility grid supply during night, when there is very little sunshine. In this mode, the system provides the rated discharge and enhances the power quality at the AC mains.

Model III: In this configuration, the utility grid and the SPV array are both sources of electricity. The system's goal is to maximize the power output from the SPV array while preserving the water discharge and rated speed. This is made possible by using grid power, which is insufficient for the rated functioning. The pump receives the maximum power transfer thanks to the boost converter. Furthermore, by regulating the flow of active power, a proportional-integral (PI) controller maintains the system's DC link voltage. The hysteresis current controller lowers the input grid current's total harmonic distortion (THD).

Mode IV: At greater solar insulations, the excess power is supplied into the grid if the installed capacity of the SPV array exceeds the rated capacity of the pump. We refer to this procedure as Mode IV. In this case, the water is pumped at the rated discharge rate and the IMD operates at its rated speed. In this mode, the front end VSC reveres the direction of the power flow, acting as a grid tie inverter. In this mode, the grid's voltage and current are out of phase.

B. MPPT with the Incremental Conductance Method

To extract the maximum power from the solar PV array, a boost converter is used. The SPV modules' IPV-VPV feature is non-linear by design. At the moment of maximum power, the operating point is compelled to settle. MPPT algorithms are used to support this. The incremental conductance approach is utilized in this work because of its stable operation and quick dynamic response. The algorithm receives data from the measured PV voltage and PV current, which are the two system parameters. The duty ratio for the boost converter is the algorithm's output. The PPV vs. VPV characteristic's slope is exploited by the INC algorithm.

The slope at the maximum power point, or MPP, $\frac{\partial v}{\partial p}PV = 0$

The curve's slope is negative near the right side of the MPP and vice versa. The incremental conductance is applied in the following equations to identify the point of operation.

Real-time perturbations are made to the boost converter's duty ratio as follows:

$$\frac{\partial v}{\partial p}PV = 0$$
$$\frac{\partial (v*I)}{\partial V}PV = 0$$
$$I_{PV} + V_{PV}\frac{\partial (I)}{\partial V}PV = 0$$
$$\frac{\partial (I)}{\partial V}PV = \frac{-(I)}{V}PV$$

C. Induction Motor Drive Control

The induction motor is driven by a scalar control since it is straightforward and requires no extra current sensors. Furthermore, because the scalar is implemented in an current.The unit template of the grid voltages is used to determine the three phase grid reference currents, isa*, i *, and i *after isd* has been determined. In order to bring the grid current to unity power factor, isq* is kept at zero. The hysteresis controller, which controls the front end VSC switching, receives three phase grid currents and compares them to reference currents. Additionally, a proportional controller receives the output from the PI controller. The speed reference c * produced by the PV power is deducted from the proportional controller's output. The feed forward term is essential for enhancing the system's dynamic response at different radiation levels. The two numbers are subtracted to estimate the frequency reference for the V/f block, f*. The switching pulses for the VSI are determined by the V/f block. Starting at a standstill, the speed is scaled up to a specific threshold. From there, the reference speed is determined using the control system previously discussed. With a grid detection block, a frequency reference selection logic is created. Table I provides the reasoning.

Table I: REGULARITY SELECTION OF REFERENCES LOGIC

	Grid	PVPower	Frequencyreference	MPPT
P_{PV}< Rated	No	Yes	MPPT	Active
P_{PV}> Rated	No	Yes	Rated	Disabled
	Yes	No	Rated	Disabled
	Yes	Yes	Rated	Active

To produce a voltage error Ve, the measured DC link voltage VDC and the reference voltage VDC* are compared.

$V(k) \square Vdc^{*}(k) - V_{dc}(k)$

The proportional-integral (PI) controller receives this voltage error in order to generate the active component of the current isd*, which is given as

$i^{*}(k) \square i^{*}(k-1) \square k\{V(k)-V(k-1)\} \square kV(k)$

The voltage PI controller's proportional and integral gains are denoted by the symbols kpv and kiv.

$\square^{*} \square k \square i$

Table I I: DESIGN OF THE SYSTEM'S PARAMETERS AND COMPONENTS

Parameter	Estimatedvalue	Selectedvalue
ForModesI,IIandIII $P_{mp} \square N_p \square I_{mp} \square N_s \square V_{mp}$ $\square 1 \square 7.7 \square 11 \square 26.6$	2.2kW	2.2kW
FormodeIV $P_{mp} \square N_p \square I_{mp} \square N_s \square V_{mp}$ $\square 1 \square 7.62 \square 20 \square 17.7$	2.7kW	2.7kW
$V_{DC} \square 22$[redacted]LL [redacted]3 $\square 2$[redacted]$\square 230$ 3	375V	400V
$C_{DC} = 6 \square$[redacted]It $[V_{DC}^{2} \square V_{DC1}^{2}]$ $C_{DC} = 6 \square$[redacted]$2 \square 133 \square 8.2 \square 0.005$ $[400^{2} \square 375^{2}]$	2026µF	2200µF
$L = \frac{\sqrt{3}mVdc}{12afI}$	2.43mH	3mH
$I_{LP} \square 2P$[redacted]$2 \square 2400$[redacted]$\square 8.9A$ V_{sab}[redacted]$3 \square 220$	8.9A	8.9A

III. MATLAB SIMULATION.

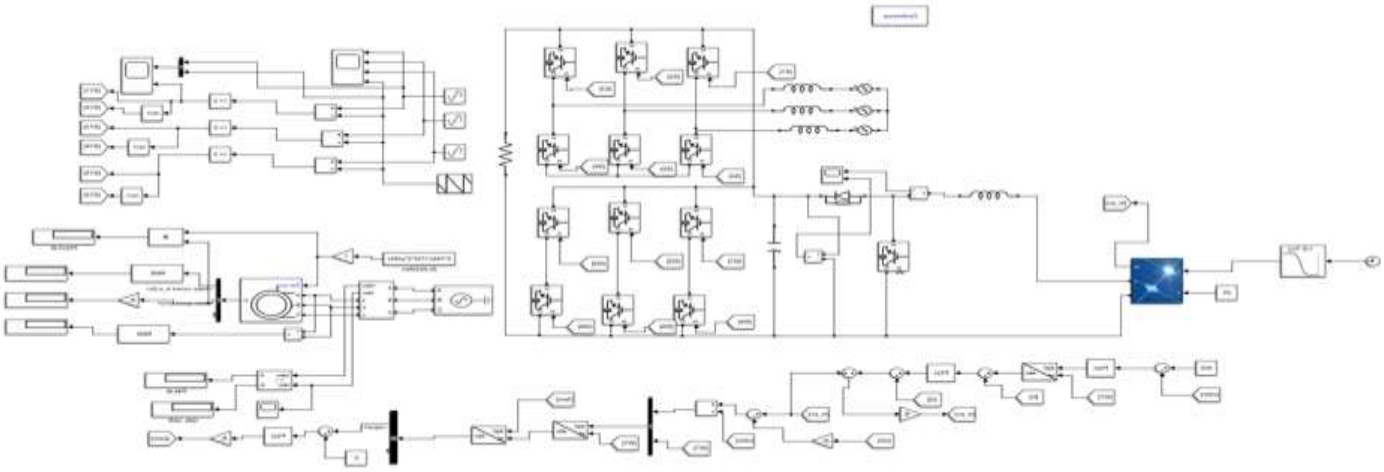

Figure 2. Shows how the suggested smart solar water pumping system is configured with the ability to flow power in both directions.

IV. SYSTEM PERFORMANCE IN MODE

The pump is solely powered by solar PV in this mode. The boost converter is turned off initially. The system's speed is increased until it reaches a 60 Hz threshold.Subsequently, the boost converter is activated and the speed is determined using the control system, as detailed in section IV. The MPP's operational point is maintained by the boost converter. The 400V reference voltage is upheld for the DC link. At the specified radiation, the VPV and IPV match the Vmp and Imp. Sinusoidal motor currents are maintained.

A step change in solar insolation is simulated in order to verify the system's performance under different radiation conditions. The system follows the MPP point with the variation in radiation in Figures 3. As can be seen from the statistics, the PV current rises and falls in proportion to changes in radiation. Nevertheless, despite the fluctuating insolation, there is no discernible change in the PV voltage.

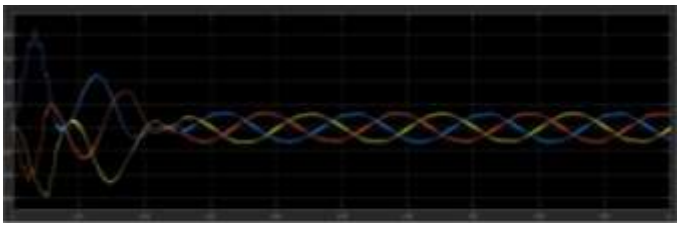

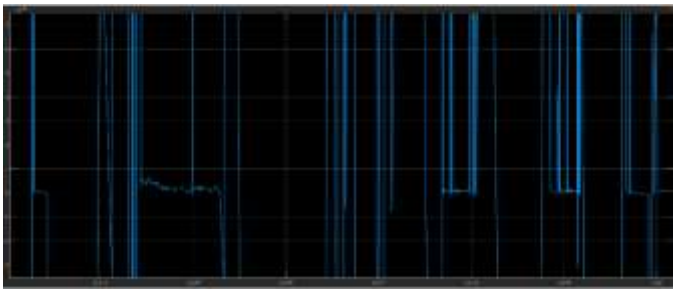

Figure 3. Startingcharacteristicsofthesystem

The system is fueled by both sources in Mode III. The PV array extracts and feeds the maximum power to the DC link at the given solar radiation. Through a VSC, the additional power needed for the pump to operate at its rated capacity is drawn from the grid. In addition to permitting electricity to flow in both directions, the VSC keeps the power factor at three phase AC mains at unity. The system's performance is evaluated under various radiation conditions by simulating an increase and reduction in solar insolation. In the radiation increases from 500 W/m2 to 800 W/m2 at t = 2 s. There is a noticeable spike in the PV power and current.

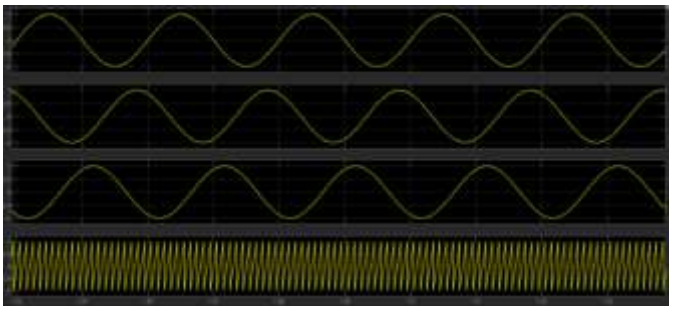

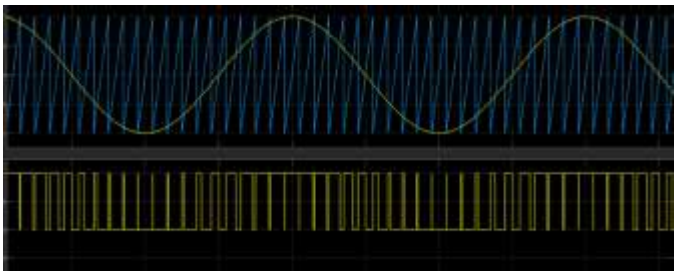

Figure 4. System performance with reduced radiation(Time-sec)

Figure 5. Thesystem of Performancewithincreaseinradiation (Time-Sec)

The grid is the system's only source of power. It is noted from the graphic, that the grid currents preserve their sinusoidal form. Nonetheless, the pump delivers rated discharge while operating at rated speed. The motor's torque is continuously maintained. VPV, IPV and PPV are tracked down to the zero value since SPV array is unplugged from the system. The 400 V reference value is maintained for the DC link voltage. The induction motor drive's reference frequency is set to its rated value. Furthermore, with no significant changes to its operational features, the system functions as if it were a grid-connected water pump.

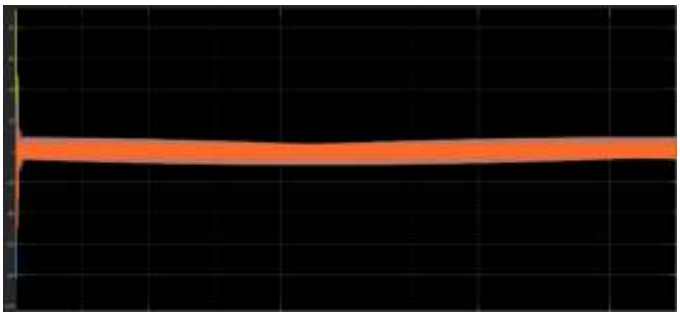

Figure 6. The system of performance output result

V. EXPERIMENT OUTCOMES

With the aid of a lab prototype, the simulated findings are compared to the experimental results. A 2.4 kW SPV array is created with an AMETEK ETS600x17DPVF PV simulator. The emulated array's VOC and ISC are set to 400 V and 7.3 A, respectively. The induction motor utilized is 2.2 kW. Since torque is proportional to speed, the DC generator is used to simulate the characteristics of a pump. To drive the IMD, a VSI (Semikron SKM200GB12V) is employed. The DSP d-DSPACE 1103 controller's ADC channel receives the sensor output.

Conclusion.

This study presents a notion of a bidirectional power flow capable smart solar water pumping system. The SPV array and the utility grid supply have both been used to power the system. Depending on the power sources' availability and the direction of the power flow, several operating modes have been found. The fundamental aspect of the system's intelligence is that it automatically gives solar power precedence over grid power. Additionally, the device puts power into the grid at higher radiation, which lowers the farmer's or consumer's overall electricity bill. The MATLAB/Simulink platform has been utilized for the design, modeling, and simulation of the system. There is enough information in the results to support the pumping system's satisfactory operation. Since there are no transformer components in the system, its size should be small.

References.

1. Sharma, U., Singh, B., & Kumar, S. (2016, November). A smart solar water pumping system with bidirectional power flow capabilities. In 2016 IEEE 7th Power India International Conference (PIICON) (pp. 1-6). IEEE.
2. Mahmoud, M. (1990, November). Experience results and techno-economic feasibility of using photovoltaic generators instead of diesel motors for water pumping from rural desert wells in Jordan. In IEE Proceedings C (Generation, Transmission and Distribution) (Vol. 137, No. 6, pp. 391-394). IET Digital Library.
3. Lim, B., Brendemühl, T., Dullweber, T., & Brendel, R. (2016). Loss analysis of n-type passivated emitter rear totally diffused back-junction silicon solar cells with efficiencies up to 21.2%. IEEE Journal of Photovoltaics, 6(2), 447-453.
4. Appelbaum, J. (1986). Starting and steady-state characteristics of DC motors powered by solar cell generators. IEEE Transactions on Energy Conversion, (1), 17-25.
5. Singer, S., & Appelbaum, J. (1993). Starting characteristics of direct current motors powered by solar cells. IEEE Transactions on Energy Conversion, 8(1), 47-53.
6. Alghuwainem, S. M. (1994). Matching of a dc motor to a photovoltaic generator using a step-up converter with a current-locked loop. IEEE transactions on Energy Conversion, 9(1), 192-198.
7. Widyan, M. S., Al Tarabsheh, A. I., Etier, I. Y., & Hanitsch, R. E. (2010). Transient analysis and output characteristics of DC motors fed by photovoltaic systems. JJMIE, 4(1).
8. Alghuwainem, S. M. (1992). Steady-state performance of DC motors supplied from photovoltaic generators with step-up converter. IEEE Transactions on Energy Conversion, 7(2), 267-272.
9. Alghuwainem, S. M. (1996). Performance analysis of a PV powered DC motor driving a 3-phase self-excited induction generator. IEEE transactions on energy conversion, 11(1), 155-161.
10. Akbaba, M., & Alattawi, M. A. (1995). A new model for I–V characteristic of solar cell generators and its applications. Solar energy materials and solar cells, 37(2), 123-132.
11. Kassem, A. M. (2012). MPPT control design and performance improvements of a PV generator powered DC motor-pump system based on artificial neural networks. International Journal of Electrical Power & Energy Systems, 43(1), 90-98.
12. Singer, S., & Appelbaum, J. (1989). Starting characteristics of direct current motors powered by solar cells (No. NAS 1.15: 101981).
13. Alghuwainem, S. M. (1994). Matching of a dc motor to a photovoltaic generator using a step-up converter with a current-locked loop. IEEE transactions on Energy Conversion, 9(1), 192-198.
14. Enslin, J. H. R., & Snyman, D. B. (1991). Combined low-cost, high-efficient inverter, peak power tracker and regulator for PV applications. IEEE Transactions on Power Electronics, 6(1), 73-82.
15. Snyman, D. B., & Enslin, J. H. R. (1989, June). Combined low-cost, high-efficient inverter, peak power tracker and regulator for PV applications. In 20th Annual IEEE Power Electronics Specialists Conference (pp. 67-74). IEEE.
16. Muljadi, E. (1997). PV water pumping with a peak-power tracker using a simple six-step square-wave inverter. IEEE Transactions on industry applications, 33(3), 714-721.
17. Shukla, S., & Singh, B. (2018). Single-stage PV array fed speed sensorless vector control of induction motor drive for water pumping. IEEE transactions on industry applications, 54(4), 3575-3585.
18. Shukla, S., & Singh, B. (2018). Reduced-sensor-based PV array-fed direct torque control induction motor drive for water pumping. IEEE transactions on power electronics, 34(6), 5400-5415.
19. Sharma, U., Kumar, S., & Singh, B. (2016, July). Solar array fed water pumping system using induction motor drive. In 2016 IEEE 1st international conference on power electronics, intelligent control and energy systems (ICPEICES) (pp. 1-6). IEEE.
20. Sharma, U., Kumar, S., & Singh, B. (2016, July). Solar array fed water pumping system using induction motor drive. In 2016 IEEE 1st international conference on power electronics, intelligent control and energy systems (ICPEICES) (pp. 1-6). IEEE.
21. Akhila, V. T., & Arun, S. (2018, August). Review of solar PV powered water pumping system using induction motor drive. In IOP Conference Series: Materials Science and Engineering (Vol. 396, No. 1, p. 012047). IOP Publishing.
22. Kumar, R., & Singh, B. (2016). BLDC motor-driven solar PV array-fed water pumping system employing zeta converter. IEEE Transactions on Industry Applications, 52(3), 2315-2322.
23. VEERABABU, B., & VEERENDRABABU, A. SOLAR PV ARRAY-FED WATER PUMPING SYSTEM USING ZETA CONVERTER BASED CLOSED-LOOP CONTROL OF BLDC MOTOR DRIVE.

24. Shaikh, S. R., & Jain, A. M. (2015, December). A high-efficient converter for photovoltaic water pumping system. In 2015 International Conference on Control, Instrumentation, Communication and Computational Technologies (ICCICCT) (pp. 522-526). IEEE.
25. Slabbert, C., & Malengret, M. (1998, July). Grid connected/solar water pump for rural areas. In IEEE International Symposium on Industrial Electronics. Proceedings. ISIE'98 (Cat. No. 98TH8357) (Vol. 1, pp. 31-34). IEEE.
26. Hussein, K. H., Muta, I., Hoshino, T., & Osakada, M. (1995). Maximum photovoltaic power tracking: an algorithm for rapidly changing atmospheric conditions. IEE Proceedings-Generation, Transmission and Distribution, 142(1), 59-64.
27. Ghassami, A. A., Sadeghzadeh, S. M., & Soleimani, A. (2013). A high performance maximum power point tracker for PV systems. International Journal of Electrical Power & Energy Systems, 53, 237-243.
28. Houssamo, I., Locment, F., & Sechilariu, M. (2010). Maximum power tracking for photovoltaic power system: Development and experimental comparison of two algorithms. Renewable energy, 35(10), 2381-2387.
29. Forero, N., Hernández, J., & Gordillo, G. (2006). Development of a monitoring system for a PV solar plant. Energy Conversion and Management, 47(15-16), 2329-2336.
30. Tyagi, V. V., Rahim, N. A., Rahim, N. A., Jeyraj, A., & Selvaraj, L. (2013). Progress in solar PV technology: Research and achievement. Renewable and sustainable energy reviews, 20, 443-461.